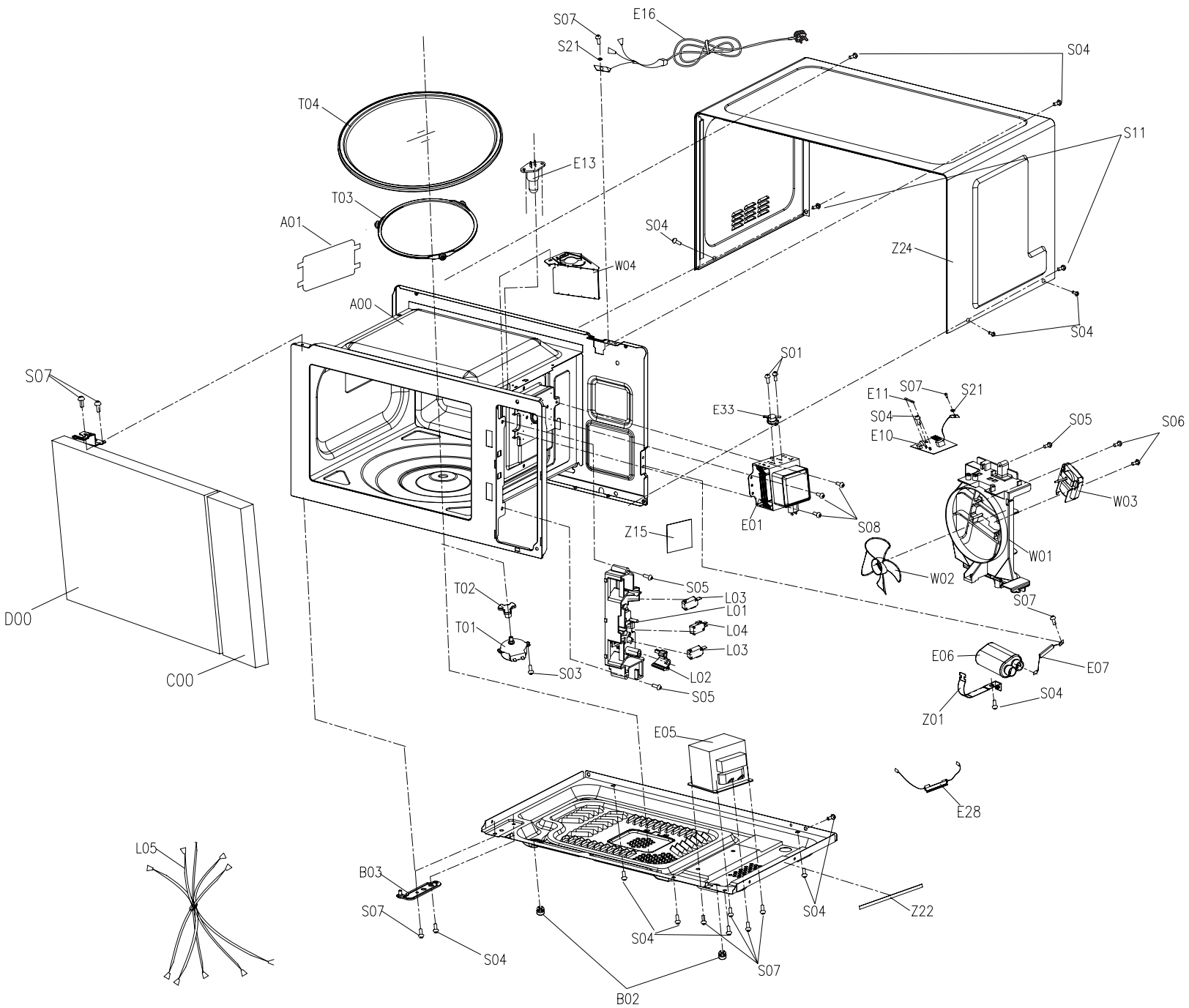

E28	Ass'y H.V.Fuse	1	
Z24	Case Out	1	
Z22	Sponge	1	
Z15	Lamp Cover	1	
Z01	Holder H.V.C	1	
W04	Guide Wind	1	
W03	Motor Fan	1	
W02	Fan	1	
W01	Guide Fan	1	
T04	Tray	1	
T03	Ring Rotating ASS'Y	1	
T02	Coupler	1	
T01	Motor Tray	1	
S21	Spring Washer ø4.1	2	
S11	Screw Φ4*10	2	
S08	Screw Φ4*10	3	
S07	Screw Φ4*8	10	
S06	Screw Φ4*20	2	
S05	Screw Φ4*12	3	
S04	Screw Φ4*10	14	
S03	Screw Φ4*8	1	
S01	Screw CT3*8BBHC	2	
L05	Harness Main	1	
L04	Microswitch Monitor	1	
L03	Microswitch Interlock	2	
L02	LEVER SWITCH	1	
L01	Board Latch	1	
E33	Thermostat 160/95 *V	1	
E16	Power Cord ASS'Y	1	
E13	Lamp	1	
E11	Fuse	1	
E10	Filter Noise	1	
E07	H.V.Diode	1	
E06	H.V.Capacitor	1	
E05	H.V.Transformer	1	
E01	Magnetron	1	
B03	BRKT Hinge *U	1	
B02	Leg	2	
B01	Base Plate	1	
D00	ASS'Y D/PANEL	1	
C00	ASS'Y C/PANEL	1	
A01	Cover Wave Guide	1	
A00	Cavity Assembly	1	Material or spec
No.	part name	Quantity	Material or spec

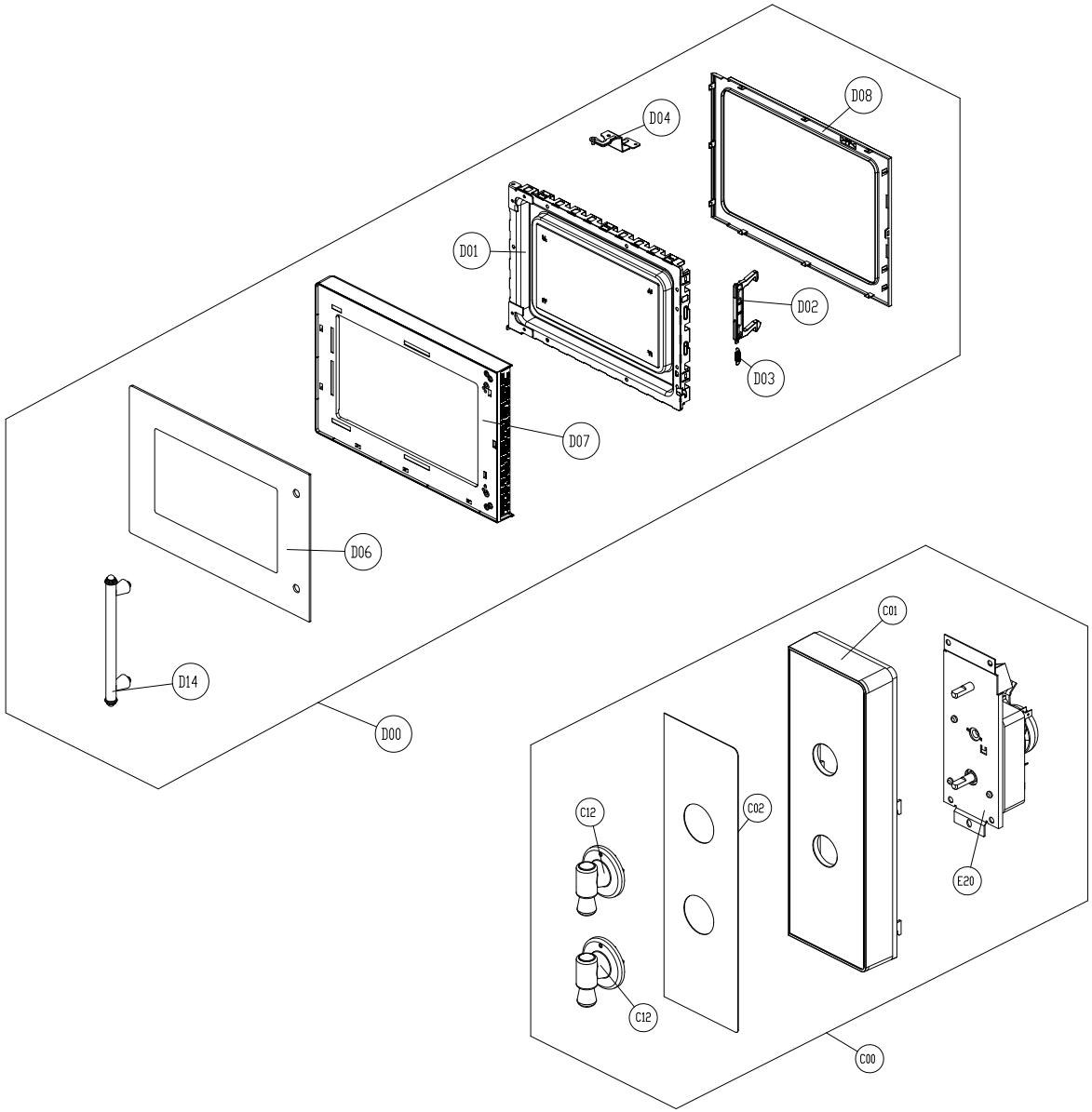

D14	拉手	HANDLE	1				
D08	门封	DOOR GASKET	1				
D07	门面	DOOR PANEL	1				
D06	门窗	DOOR SCREEN	1	S02	螺钉ST3*8PBHC	SCREW ST3*8PBHC	3
D05	门膜	DOOR INNER FILM	1	E20	定时器	TIMER	1
D04	下铰链	UPPER HINGE	1				
D03	门钩弹簧	SPRING LATCH	1	C12	定时器旋钮	TIMER KNOB	2
D02	门钩	LATCH	1	C02	控制面板贴片	DECO. C/PANEL	1
D01	门框组件	DOOR FRAME ASS'Y	1	C01	控制面板	CONTROL PANEL	1
D00	炉门	DOOR	1	C00	控制面板组件	CONTROL PANEL ASS'Y	1
No.	零部件名称	Part Name	Qty.	No.	零部件名称	Part Name	Qty.